MOTOR:
ECM WITH FORWARD CURVED WHEEL
- ☐ **120V, 50/60 Hz, 1 PHASE, 5.0 FLA**
- ☐ 208-240V, 50/60 Hz, 1 PHASE, 3.0 FLA
- ☐ 277V, 50/60 Hz, 1 PHASE, 2.5 FLA

FILTER:
- ☐ **HEPA 99.99% @ 0.3 MICRON UL 900 (MRFH53)**
- ☐ ULPA 99.9995% @ 0.12 MICRON UL 900 (MRFU53)
- ☐ OTHER _____

CONTROL:
UNIVERSAL CONTROL CARD (UCC)
- CONTROL MODE - DIP SWITCH SELECTABLE:
  - MANUAL MODE: ONBOARD TRIM POT ADJUSTMENT
  - ANALOG MODE: 0 - 10VDC INPUT
  - NETWORK MODE: MODBUS RTU

HOUSING FINISH:
- ☐ **MILL FINISH ALUMINUM (M01)**
- ☐ POWER COAT PAINT - WHITE (M02)
- ☐ 304 STAINLESS STEEL (M304)

SCREEN FINISH:
- ☐ **ANODIZED ALUMINUM (D01)**
- ☐ POWER COAT PAINT - WHITE (D02)
- ☐ 304 STAINLESS STEEL (D304)

OPTIONS (SELECT MULTIPLE IF APPLICABLE):
- ☐ MOTOR RUN INDICATOR LIGHT - GREEN (IL)
  [ON = MOTOR RUNNING; OFF = MOTOR FAILURE]
- ☐ FILTER LOAD INDICATOR LIGHT - RED (ILFS)
  [ON = TIME TO CHANGE FILTER]
- ☐ CONTINUOUS FILTER MONITORING
  - ☐ READ 0-10V OUTPUT SIGNAL WITH ATTACHED FLYING LEADS (SPS)
  - ☐ READ DIRECTLY FROM MODBUS OF ACC CONSOLE/UCC (SPSC)
- ☐ INSULATION - APPLIED TO UNIT TOP AND SIDES (INS)
- ☐ FILTER SHIPPED SEPARATELY FROM UNIT (FSL)
- ☐ SEISMIC HANGER BRACKETS & SITE SPECIFIC SEISMIC CERTIFICATE
  *Additional hardware required, see submittal 8000024.

MOTOR PROGRAMMING:
- ☐ **CONSTANT CFM**
- ☐ LOW AIRFLOW (LF)
- ☐ CONSTANT SPEED (SP)

CERTIFICATION:
- ☐ **UL 507 LISTED (E152685)**
- ☐ CE CERTIFIED

NOTE: ITEMS IN **BOLD** DESIGNATE STANDARD OFFERING

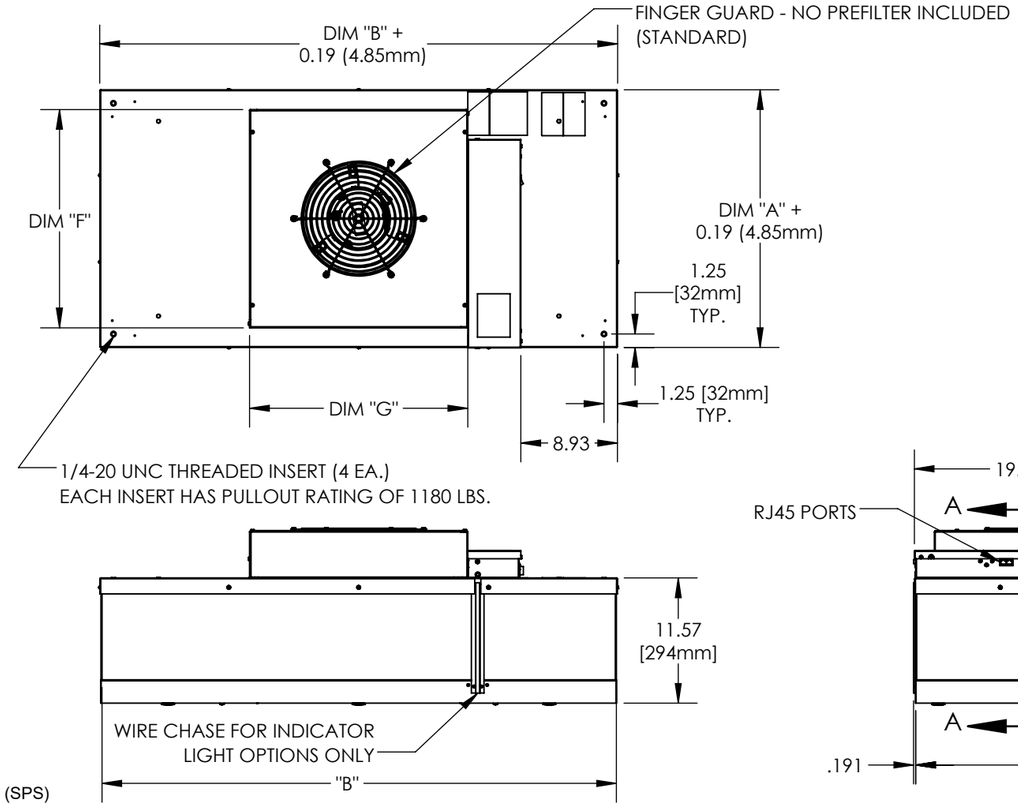

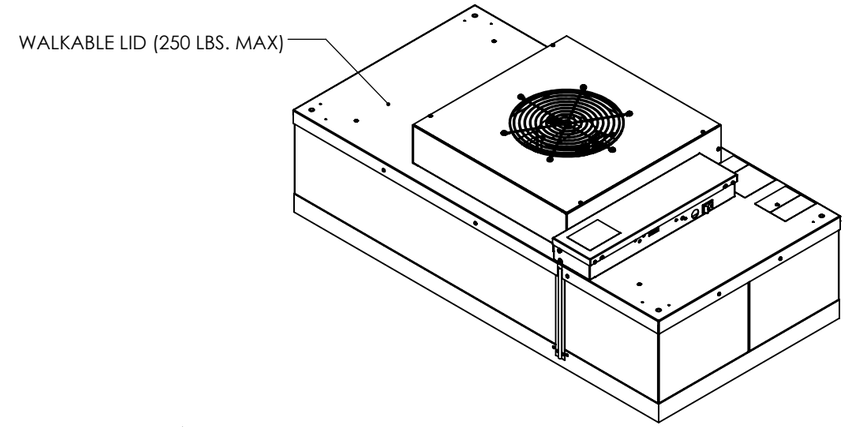

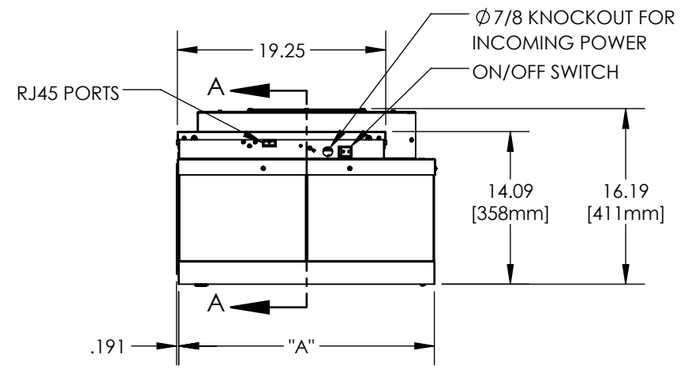

PREFILTER BRACKET SIZE (OD)		NOMINAL FILTER SIZE
DIM "F" in (mm)	DIM "G" in (mm)	
20.16 (512)	20.16 (512)	2X4 2X3.5 2X3
23.40 (594)	14.06 (357)	2X2

NOTE:
MAC10 IQ RSRC UNITS NOT TO BE USED WITH VARIABLE AIR FLOW SUCH AS VAV BOXES. CONSULT FACTORY WTH QUESTIONS.

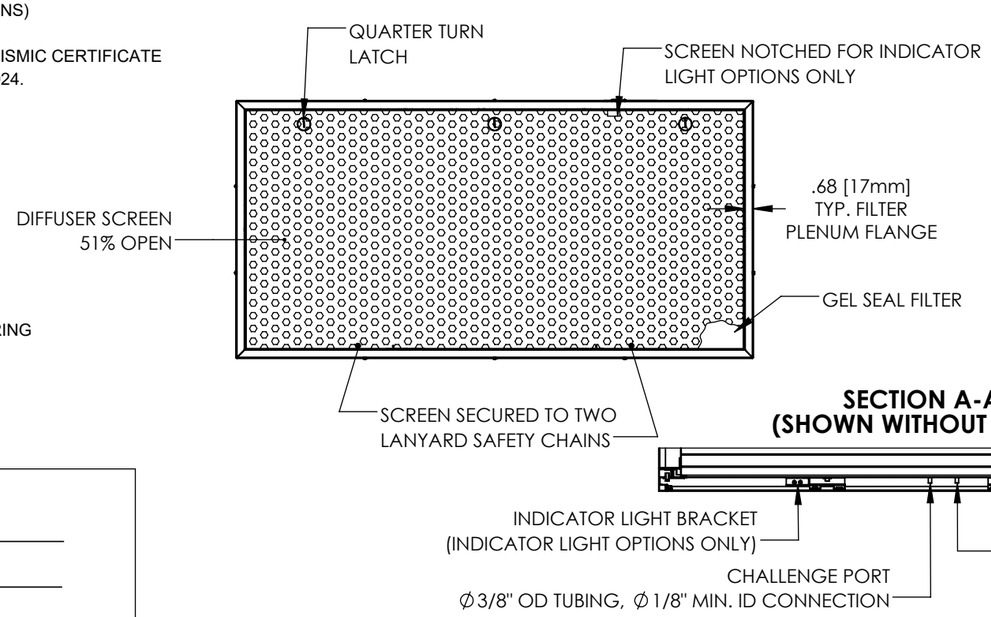

	HOUSING SIZE (OD)		GRID SIZE	NOMINAL FILTER SIZE	APPROX. WEIGHT lbs (kg)
	DIM "A" in (mm)	DIM "B" in (mm)			
☐	**23.63 (600)**	**47.63 (1210)**	**1.5" (S04)**	2X4	ALUM: 71(32) SST: 81 (37)
☐	23.13 (588)	47.13 (1197)	2" (S08)		
☐	23.03 (585)	46.63 (1185)	-		
☐	23.63 (600)	41.63 (1057)	1.5" (S03)	2X3.5	ALUM: 62(28) SST: 72 (33)
☐	23.13 (588)	41.13 (1045)	2" (S07)		
☐	23.03 (585)	40.75 (1035)	-		
☐	23.63 (600)	35.63 (905)	1.5" (S02)	2X3	ALUM: 54 (24) SST: 64 (29)
☐	23.13 (588)	35.13 (892)	2" (S06)		
☐	23.03 (585)	34.84 (885)	-		
☐	23.63 (600)	23.63 (600)	1.5" (S01)	2X2	ALUM: 44 (20) SST: 54 (24)
☐				**OTHER	N/A

** CONTACT ENVIRCO TO ENSURE SIZE AVAILABILITY.

SIGNATURE _____
DATE _____
COMPANY _____
PROJECT _____
P.O. _____

DIMENSIONS ARE IN INCHES
TOLERANCES-UNLESS OTHERWISE SPECIFIED
.X OR X/X ±.05 — CONC .005 TIR
.XX ±.03 — BEND RAD: DWG 122223
.XXX ±.015 — FINISH: NONE
ANGULAR ±1° — REMOVE BURRS AND SHARPS

MATERIAL:

SHEAR SIZE	SQ FT	U/M
x		

ENVIRCO Innovators in clean air technology

DRN	CKD	APP
CJS	DAR	DAR
09/24/18	09/24/18	09/24/18

TITLE: MAC10 IQ - CONSTANT CFM
RSRC-ROOM-SIDE REMOVABLE FILTER, MOTOR, CONTROL CARD

DWG: 8000022

REV C
SCALE 1:12
SHEET 1/1